Prescriptive Residential Wood Deck Design Handout

This handout reflects code requirements of the 2021 International Residential Code (IRC) with Washington State Amendments which update the live load to 60 psf. This document provides building code information applicable to **prescriptive residential wood deck design**.

You may need to hire a licensed architect or an engineer to design a deck where any of the following conditions apply:

- The deck serves other than a one- or two-family dwelling building
- The deck design includes more than one level
- The deck will support a hot tub, spa or other heavy object, including heavy deck covering (such as pavers)
- The walking surface is more than 10^{ft} above grade
- The deck ledger is attached to house overhangs, bay windows, bricks, stone or concrete block
- The deck is bearing on ground with a slope greater than 1^{ft} horizontal for every 1^{ft} vertical
- The deck is self-supporting (not attached to an exterior wall)

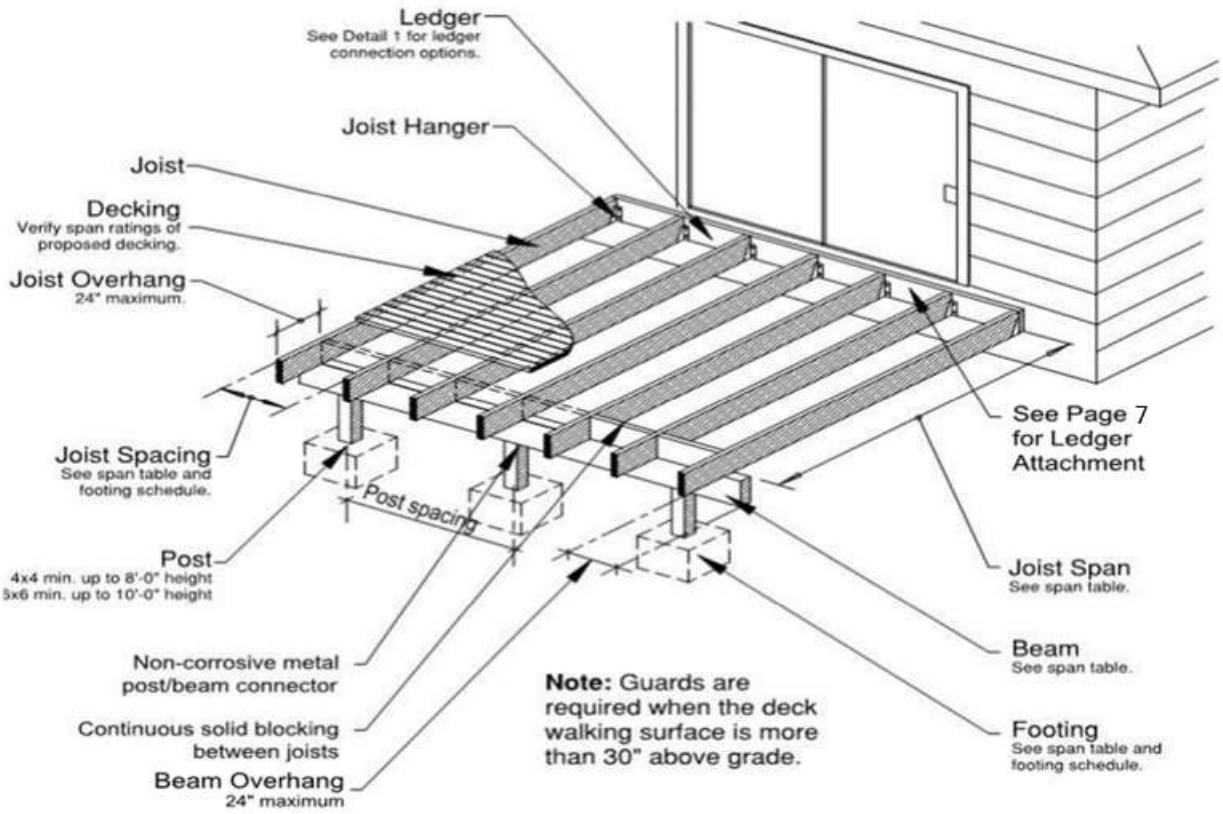

1216 W. Robert Bush Dr., PO Box 68, South Bend, WA 98586 ph 360.875.9356, fax 360.875.9304
7013 Sandridge Rd., Long Beach, WA 98631 ph 360.642.9382, fax 360.642.9387

"Pacific County is an Equal Opportunity Employer & Provider"

Deck Construction Notes

- **Please note that due to the new 60 psf loading, previous lumber spans and footing sizes have changed.**
- The illustrations and information contained within this handout may be used for decks whether or not they require a permit.
- All wood must be pressure treated or naturally resistant to decay. Treat cuts, holes and notches with end-cut solution.
- Fasteners, hangers, nails, etc., must be stainless steel, hot-dipped galvanized, or as specifically required for the specified wood preservative used. The coating weights for zinc-coated fasteners to be in accordance with ASTM A 153. Provide documentation in the field showing the required fastener protection for the wood chosen for your deck.
- You may modify any components of this handout using accepted engineering practices. Any modifications must be reviewed prior to permit issuance. All attachments must be per manufacturer's installation instructions.
- This handout is intended to represent good construction practices for deck construction and related IRC requirements.

Typical Deck Section

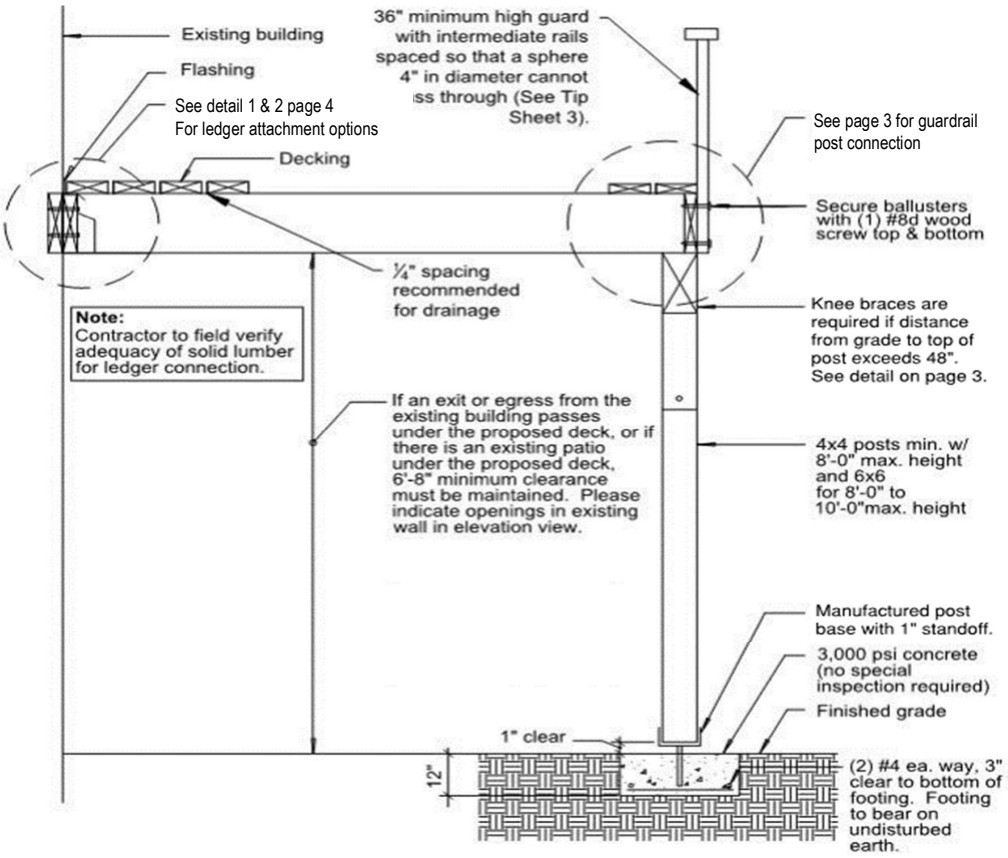

1216 W. Robert Bush Dr., PO Box 68, South Bend, WA 98586 ph 360.875.9356, fax 360.875.9304
7013 Sandridge Rd., Long Beach, WA 98631 ph 360.642.9382, fax 360.642.9387

"Pacific County is an Equal Opportunity Employer & Provider"

Post to Beam Connection w/ Knee Brace

(Knee braces are required on posts greater than 4 feet in height)

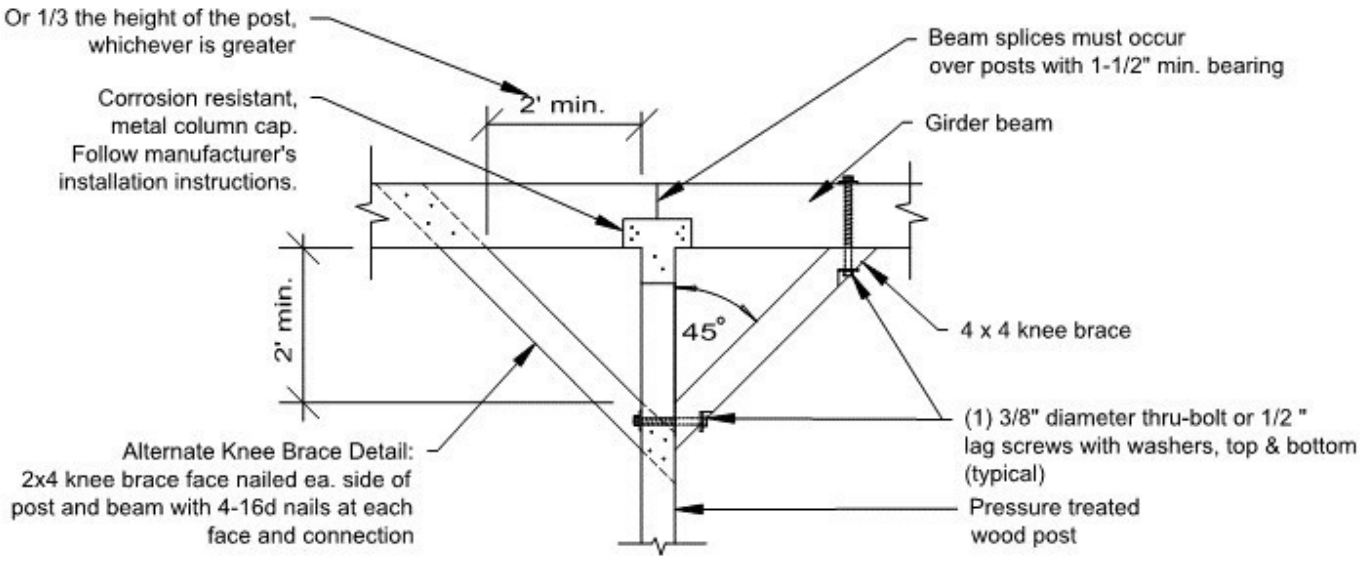

Guardrail Attachment

(Guardrails are required when the deck is more than 30 inches above grade)

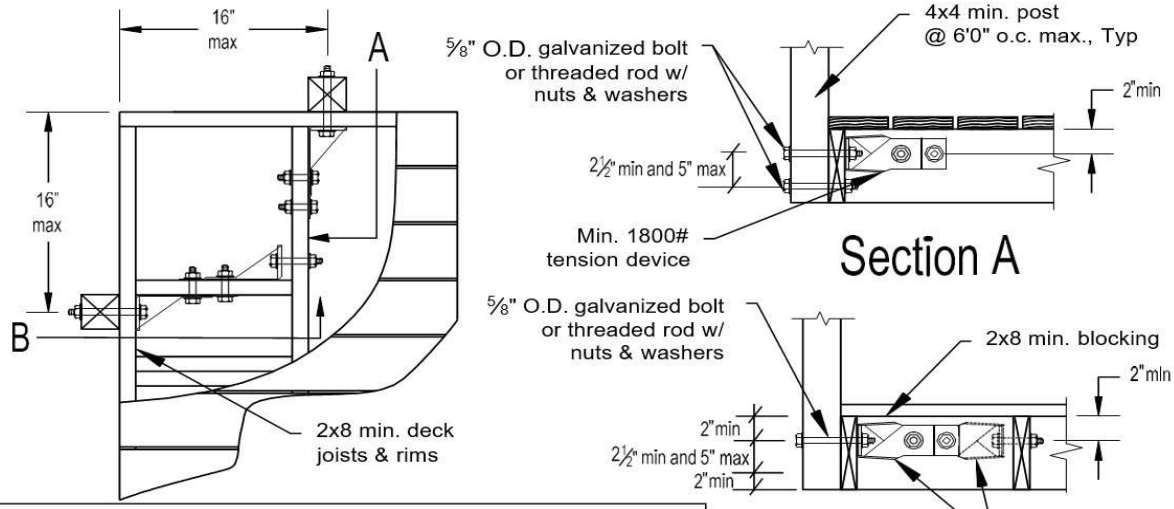

Note:
Use above details for guard connections or provide engineered design that shows Guards can resist a single concentrated load of 200 lbs applied in any direction at any point along the top and have attachment devices and supporting structure to transfer this load to appropriate structural elements of the building per IBC sec 1607.7.1.1

1216 W. Robert Bush Dr., PO Box 68, South Bend, WA 98586 ph 360.875.9356, fax 360.875.9304
7013 Sandridge Rd., Long Beach, WA 98631 ph 360.642.9382, fax 360.642.9387

"Pacific County is an Equal Opportunity Employer & Provider"

Detail 1 – Ledger Attachment for Lateral Loads

(Knee braces are required on posts greater than 4 ft in height)

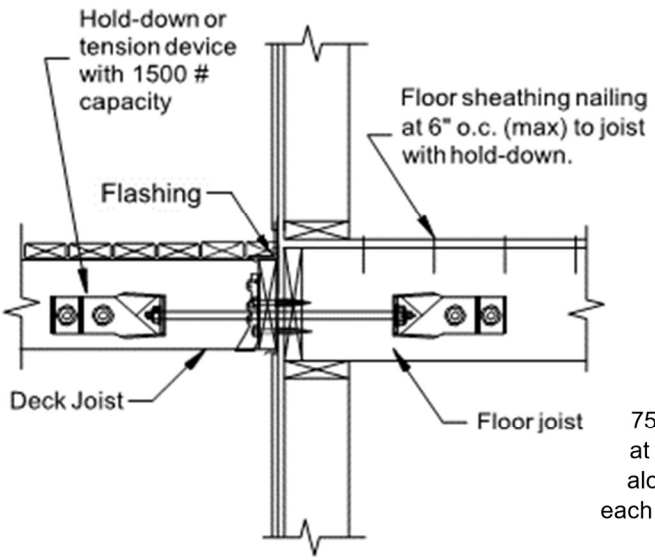

Option # 1

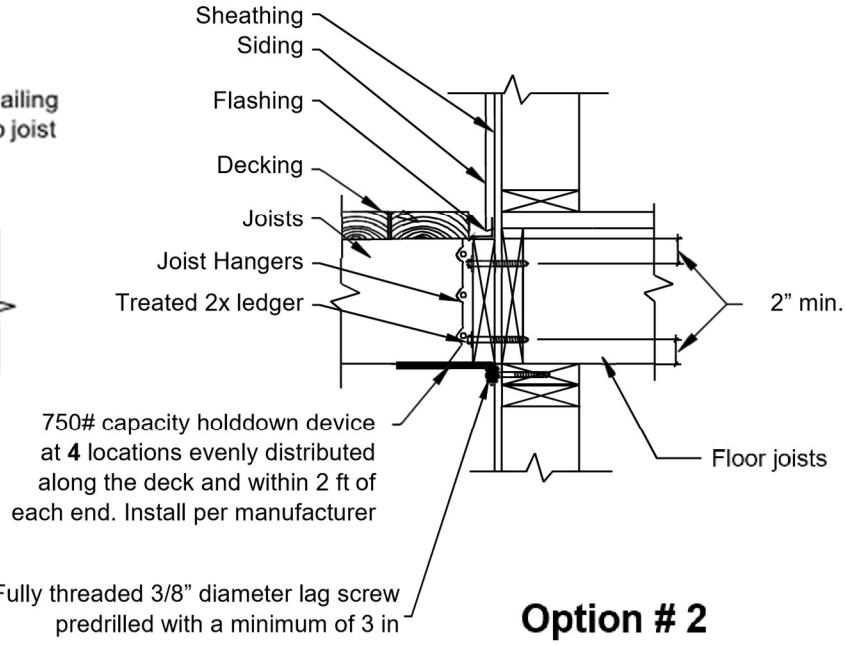

Option # 2

Deck Connections

(All fasteners, nails, bolts, screws and connectors must be corrosion resistant)

Connection:	Fastening:
Manufactured Connectors	Follow manufacturer's instructions
Post to Footing	Post base is required
Post to Footing (High Winds)	Consult with jurisdiction about additional uplift loads where wind exposure is greater than Risk Category B.
Post to Beam	Connector is required
Ledger to House Framing	See information on Sheet 5 and Sheet 6
Joist to Beam or Girder	(3) 8d – Toe nailed
Blocking or Bridging to Joist	(2) 10d –Toe nailed @ each end
Wooden Deck Boards	(2) 8d threaded nails OR (2) No. 8 screws
Composite Decking	Follow manufacturer's instructions

1216 W. Robert Bush Dr., PO Box 68, South Bend, WA 98586 ph 360.875.9356, fax 360.875.9304
7013 Sandridge Rd., Long Beach, WA 98631 ph 360.642.9382, fax 360.642.9387

"Pacific County is an Equal Opportunity Employer & Provider"

Minimum Footing Size for Decks

(Reference IRC Table 507.3.1)

LIVE OR GROUND SNOW LOAD (psf)	TRIBUTARY AREA (sq.ft.)	LOAD-BEARING VALUE OF SOILS[acd] (psf)					
		1500[e]			2000[e]		
		Side of a square footing (inches)	Diameter of a round footing (inches)	Thickness[f] (inches)	Side of a square footing (inches)	Diameter of a round footing (inches)	Thickness[f] (inches)
60 Live or 70 Ground Snow Load	5	7	8	6	7	8	6
	20	12	14	6	11	13	6
	40	18	20	6	15	17	6
	60	21	24	8	19	21	6
	80	25	28	9	21	24	8
	100	28	31	11	24	27	9
	120	30	34	12	26	30	10
	140	33	37	13	28	32	11
	160	35	40	15	30	34	12

For SI: 1 inch = 25.4 mm, 1 square foot = 0.0929 m2, 1 pound per square foot = 0.0479 kPa.

a. Interpolation permitted; extrapolation not permitted.
b. Reserved.
c. Footing dimensions shall allow complete bearing of the post.
d. If the support is a brick or CMU pier, the footing shall have a minimum 2-inch projection on all sides.
e. Area, in square feet, of deck surface supported by post and footings.
f. Minimum thickness shall only apply to plain concrete footings.

Maximum Post Height

(Reference IRC Table 507.4)

LOADS [b] (psf)	POST SPECIES [c]	TRIBUTARY AREA [g, h] (sq. ft.)								
			20	40	60	80	100	120	140	160
		POST SIZE [d]	MAXIMUM DECK POST HEIGHT [a] (feet-inches)							
60 Live Load, ≤60 Ground Snow Load	Douglas Fire, Hem-fire, SPF [e]	4 x 4	14-0	10-10	8-7	7-0	5-8	4-1	NP	NP
		4 x 6	14-0	13-10	11-1	9-5	8-2	7-3	6-4	5-4
		6 x 6	14-0	14-0	14-0	14-0	14-0	13-3	10-9	6-11
		8 x 8	14-0	14-0	14-0	14-0	14-0	14-0	14-0	14-0

For SI: 1 inch = 25.4 mm, 1 foot = 304.8 mm, 1 square foot = 0.0929 m2, 1 pound per square foot = 0.0479 kPa, NP = Not permitted.

a. Measured from the underside of the beam to top of footing or pier.
b. 10 psf dead load. Snow load not assumed to be concurrent with live load.
c. No. 2 grade, wet service factor included.
d. Notched deck posts shall be sized to accommodate beam size in accordance with IRC Section 507.5.2.
e. Includes incising factor.
f. Incising factor not included.
g. Area, in square feet, of deck surface supported by post and footing.
h. Interpolation permitted. Extrapolation not permitted

1216 W. Robert Bush Dr., PO Box 68, South Bend, WA 98586 ph 360.875.9356, fax 360.875.9304
7013 Sandridge Rd., Long Beach, WA 98631 ph 360.642.9382, fax 360.642.9387

"Pacific County is an Equal Opportunity Employer & Provider"

Maximum Deck Beam Span

(Reference IRC Table 507.5)

60 psf live load or 70 psf ground snow load [c]

BEAM SPECIES [d]	BEAM SIZE [e]	EFFECTIVE DECK JOIST SPAN LENGTH [a, i] (feet)						
		6	8	10	12	14	16	18
		MAXIMUM DECK BEAM SPAN LENGTH [a, b, f] (feet-inches)						
Douglas fir-larch [g], Hem-fir [g], Spruce-pine-fir [g]	1-2×6	3-5	2-10	2-5	2-2	2-0	1-10	1-9
	1-2×8	4-7	3-8	3-2	2-10	2-7	2-5	2-4
	1-2×10	5-8	4-9	4-1	3-8	3-4	3-1	2-11
	1-2×12	6-7	5-8	5-0	4-6	4-1	3-10	3-7
	2-2×6	5-2	4-6	4-0	3-5	3-1	2-10	2-7
	2-2×8	6-11	6-0	5-3	4-7	4-1	3-8	3-5
	2-2×10	8-5	7-4	6-6	5-10	5-2	4-9	4-5
	2-2×12	9-10	8-6	7-7	6-11	6-4	5-9	5-4
	3-2×6	6-6	5-7	5-0	4-7	4-2	3-9	3-5
	3-2×8	8-8	7-6	6-8	6-1	5-6	5-0	4-7
	3-2×10	10-7	9-2	8-2	7-6	6-11	6-4	5-10
	3-2×12	12-4	10-8	9-7	8-9	8-1	7-7	7-1

For SI: 1 inch = 25.4 mm, 1 foot = 304.8 mm, 1 pound per square foot = 0.0479 kPa, 1 pound = 0.454 kg.

a. Interpolation allowed. Extrapolation is not allowed.
b. Beams supporting a single span of joists with or without cantilever.
c. Dead load = 10 psf, L/Δ = 360 at main span, L/Δ = 180 at cantilever. Snow load not assumed to be concurrent with live load.
d. No. 2 grade, wet service factor included.
e. Beam depth shall be equal to or greater than the depth of intersecting joist for a flush beam connection.
f. Beam cantilevers are limited to the adjacent beam's span divided by 4.
g. Includes incising factor.
h. Incising factor not included.
i. Deck joist span as shown in Figure R507.5.
j. For calculation of effective joist span, the actual joist span length shall be multiplied by the joist span factor in accordance with IRC 507.5(5)

1216 W. Robert Bush Dr., PO Box 68, South Bend, WA 98586 ph 360.875.9356, fax 360.875.9304
7013 Sandridge Rd., Long Beach, WA 98631 ph 360.642.9382, fax 360.642.9387

"Pacific County is an Equal Opportunity Employer & Provider"

Maximum Deck Joist Spans

(Reference Table 507.6)

LOAD [a] (psf)	JOIST SPECIES [b]		ALLOWABLE JOIST SPAN [b, c] (feet-inches)			MAXIMUM CANTILEVER [d, f] (feet-inches)							
			Joist Spacing (inches)			Adjacent Joist Back Span[g] (feet)							
		JOIST SIZE	12	16	24	4	6	8	10	12	14	16	18
60 Live Load or 70 Ground Snow Load	Douglas-fir, larch[e], Hem-fir[e], Spruce-pine-fir[e]	2×6	7-11	7-1	5-9	1-0	1-6	NP	NP	NP	NP	NP	NP
		2×8	10-5	9-5	7-8	1-0	1-6	2-0	2-1	NP	NP	NP	NP
		2×10	13-3	11-6	9-5	1-0	1-6	2-0	2-6	2-8	NP	NP	NP
		2×12	15-5	13-4	10-11	1-0	1-6	2-0	2-6	3-0	3-3	NP	NP

For SI: 1 inch = 25.4 mm, 1 foot = 304.8 mm, 1 pound per square foot = 0.0479 kPa, 1 pound = 0.454 kg, NP = Not permitted.

a. Dead load = 10 psf dead load. Snow load not assumed to be concurrent with live load.

b. No. 2 grade, wet service factor included.

c. L/Δ = 360 at main span.

d. L/Δ = 180 at cantilever with 220-pound point load applied to end.

e. Includes incising factor.

f. Incising factor not included.

g. Interpolation permitted. Extrapolation not permitted.

Deck Ledger Connection to Band Joist [a, b]

(Reference IRC Table R507.9.1.3(1)

Deck live load = 60 psf, deck dead load = 10 psf, snow load ≤ 40 psf)

Connection Details	Joist Span						
	6′ and less	6′1″ to 8′	8′1″ to 10′	10′1″ to 12′	12′1″ to 14′	14′1″ to 16′	16′1″ to 18′
	On-center spacing of fasteners						
½ inch diameter lag screw with ½ inch maximum sheathing [c,d]	22	16	13	11	9	8	7
½ inch diameter bolt with ½ inch maximum sheathing [d]	36	31	25	20	17	15	13
½ inch diameter bolt with 1-inch maximum sheathing [e]	35	26	21	17	15	13	11

For SI: 1inch = 25.4 mm, 1 foot = 304.8 mm, 1 pound per square foot = 0.0479 kPa.

a. Ledgers shall be flashed in accordance with IRC Section 703.4 to prevent water from contacting the house band joist.

b. Snow load shall not be assumed to act concurrently with live load.

c. The tip of the lag screw shall fully extend beyond the inside face of the band joist.

d. Sheathing shall be wood structural panel or solid sawn lumber.

e. Sheathing shall be permitted to be wood structural panel, gypsum board, fiberboard, lumber or foam sheathing. Up to 1/2-inch thickness of stacked washers shall be permitted to substitute for up to ½-inch of allowable sheathing thickness where combined with wood structural panel or lumber sheathing.

1216 W. Robert Bush Dr., PO Box 68, South Bend, WA 98586 ph 360.875.9356, fax 360.875.9304
7013 Sandridge Rd., Long Beach, WA 98631 ph 360.642.9382, fax 360.642.9387

"Pacific County is an Equal Opportunity Employer & Provider"

Placement of Lag Screws and Bolts in Ledgers and Band Joists

(Reference IRC Table 507.9.1.3(2)

Minimum End and Edge Distance and Spacing Between Rows				
	Top Edge	**Bottom Edge**	**Ends**	**Row Spacing**
Ledger [a]	2 inches [d]	3/4 inch	2 inches [b]	1 5/8 inches [b]
Band joist [c]	3/4 inch	2 inches [e]	2 inches [b]	1 5/8 inches [b]

For SI: 1 inch = 25.4mm

a. Lag screws or bolts must be staggered from the top and bottom along the horizontal run. See figures below.

b. Maximum 5 inches.

c. For engineered rim joists, the manufacturer's recommendations govern.

d. The minimum distance from the bottom row to the top edge of the ledger must be in accordance with figure below.

e. 2 inches may be reduced to 3/4 inch when the band joist is directly supported by a mudsill, header, or by double top wall plates.

Placement of Lag Screws and Bolts in Ledgers

(Reference IRC Figure 507.9.1.3(2)

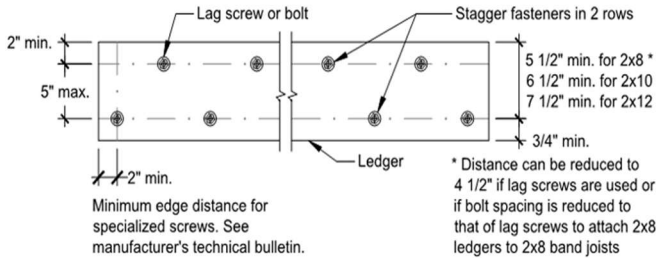

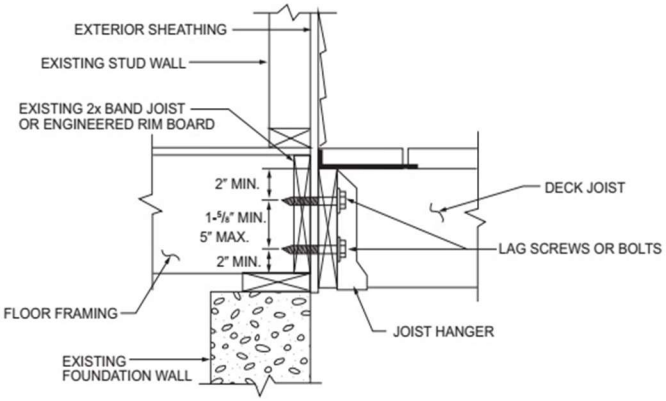

1216 W. Robert Bush Dr., PO Box 68, South Bend, WA 98586 ph 360.875.9356, fax 360.875.9304
7013 Sandridge Rd., Long Beach, WA 98631 ph 360.642.9382, fax 360.642.9387

"Pacific County is an Equal Opportunity Employer & Provider"

Pacific County

DEPARTMENT OF COMMUNITY DEVELOPMENT

BUILDING • ENVIRONMENTAL HEALTH • PLANNING

Wood Deck Design

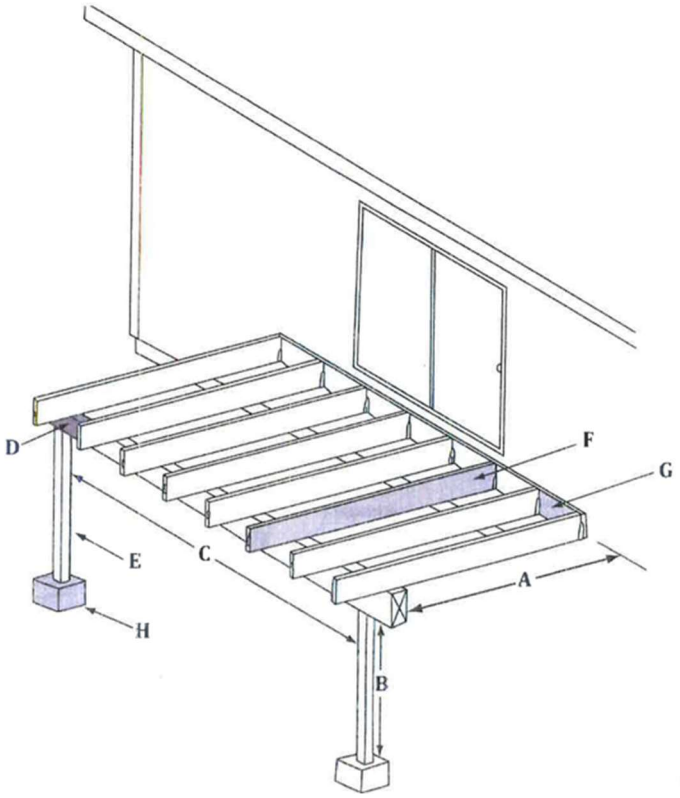

Please complete each item below (ft. = feet / in = inches)

A. Span Joist: _____ft _____in

B. Height of Post: _____ft _____in

C. Span of Beam: _____ft _____in

D. Size of Beam: _____in X _____in

E. Size of Post: _____in X _____in

F. Size of Joist: _____in X _____in
Spacing on Center: _____in

G. Ledger Lag Screw or Bolt Placing: _____ in
Ledger Lag Screw or Bolt Diameter: _____ in
Ledger Lag Screw or Bolt Length: _____ in

H. Footing Size: _____in X _____ in

Deck Tread Material Type: _____

Authorized Signature:	
Print Name:	Date:

7/29/2024

1216 W. Robert Bush Dr., PO Box 68, South Bend, WA 98586 ph 360.875.9356, fax 360.875.9304
7013 Sandridge Rd., Long Beach, WA 98631 ph 360.642.9382, fax 360.642.9387

"Pacific County is an Equal Opportunity Employer & Provider"